Baumer
Passion for Sensors

Fiber optic cables

FUF 050B1003

Glass fiber optic cable

Article number: 10217001

Overview

- Diffuse type
- Sensing distance up to 25 mm
- Threaded sensing head M3
- Metal jacket 50 cm long
- Operating temperature up to +250 °C
- For rugged fiber optic sensors FVDM 15

Picture similar

Technical data

General data	
Operating principle	Diffuse type
Sensing distance Tw	25 mm
Fiber optic head	Cylindrical threaded
Operating temperature	-25 … +250 °C
Exit angle	60°
Fiber optics can be shortened to length	No
Integrated lens	No
Adaptable lens	No
Infrared light compatibility (1450 nm)	Yes

Mechanical data	
Width / diameter (head)	3 mm
Height / length (head)	17 mm
Material (head)	Brass
Thread	M3 x 0.5
Bending radius (fixed)	15 mm
Bending radius (mobile)	24 mm
Cable jacket diameter	4 mm
Material cable jacket	Brass chromium plated
Fiber cross section	0.5 mm²
Material (fiber optic cable)	Glass
Length (fiber optic cable)	50 cm

Dimension drawing

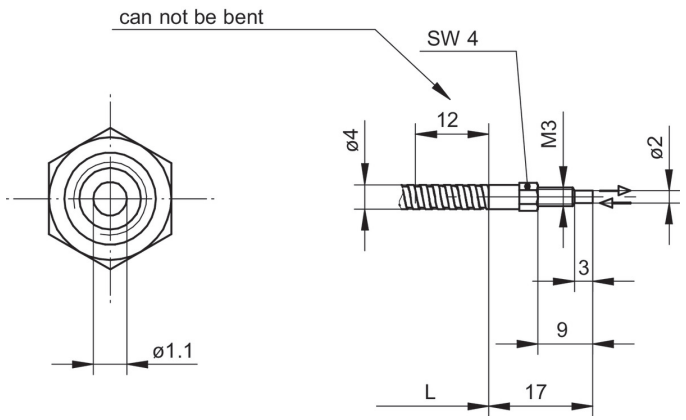

Fiber arrangement

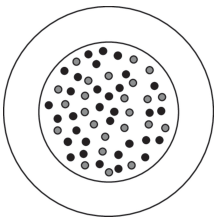

Accessories

Fitting fiber optic sensors	
10234639	FVDM 15N5103
10122368	FVDM 15N5103/S14
10234520	FVDM 15P5103
10239451	FVDM 15P5103/S14
10234519	FVDM 15P5130
10124952	FVDM 15P5130/S14

Mounting accessories	
10103230	Replacement cap nut for fiber optics series 15

2024-09-19 The product features and technical data specified do not express or imply any warranty. Technical modifications subject to change.