Baumer

Passion for Sensors

Mounting and operating instructions

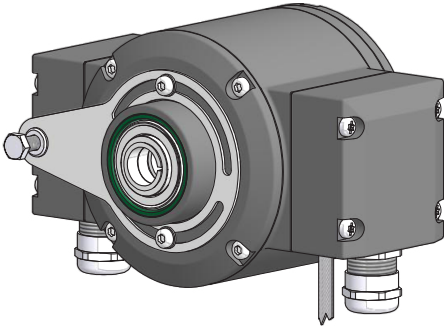

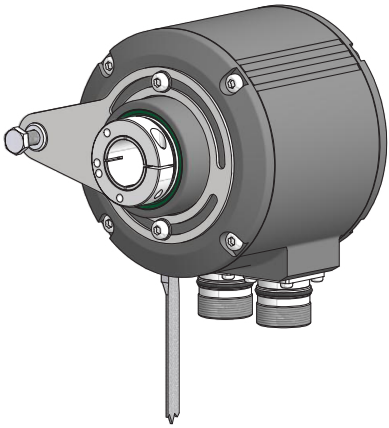

HMG10 • HMG10P incremental

Incremental encoder with magnetic sensing

MB258EN - 11196411, 22A1, Baumer_HMG10-INC_EN_202210_MI_11196411

HÜBNER BERLIN
A Baumer Brand

TABLE OF CONTENTS

1. IMPORTANT NOTES

1.1 Symbol guide

Warning
Disregarding could result in serious injury, death or damage to property

Attention
Disregarding could result in damage to property or damage/malfunction of the device

Information
Additional information and recommendations

1.2 Intended use

The incremental encoder HMG10/HMG10P is a precision measurement device for the acquisition of speed/position information for the control of drive units and the provision of electronic output signals for downstream devices.

The device must not be used for any other purpose. The function of the device is described in this mounting instruction. The customer must check the suitability for the purpose intended.

Mounting and selection must be executed by authorized and qualified personnel. Mounting, electrical commissioning or any other work with the device or system is to be performed by appropriately qualified staff only.

Do not put the device into service if there is any visible evidence of damage.

Do not operate the device beyond the limit values stated in this mounting instruction.

Any risk of personal injury, damage of the system or company equipment due to failure or malfunction of the device must be eliminated by corresponding safety measures.

Warning
Disregarding intended use could result in serious injury or damage to property.

1.3 Exclusion from liability

The manufacturer is not liable for any damage to persons or property resulting from unintended use of the device.

1.4 Maintenance and service life

The device may be only opened as described in this instruction. Repair or maintenance work that requires opening the device completely must be carried out by the manufacturer.

Alterations of the device are not permitted.

The expected service life of the device depends on the ball bearings, which are equipped with a permanent lubrication.

In the event of queries or subsequent deliveries, the data on the device type label must be quoted, especially the type designation and the serial number.

1.5 Approvals and warranty

EU Declaration of Conformity meeting to the European Directives.

UL approval / E256710.

We grant a 2-year warranty in accordance with the regulations of the Central Association of the German Electrical Industry (ZVEI).

i warranty seal
Damaging the warranty seal on the device invalidates warranty.

1.6 Operating and storage temperature range

The storage temperature range of the device is between -15 °C and +70 °C (caused by packing).

The operating temperature range of the device is between -40 °C and +95 °C, measured at the housing.

1.7 Disposal (environmental protection)

Do not dispose of electrical and electronic equipment in household waste. The product contains valuable raw materials for recycling. Whenever possible, waste electrical and electronic equipment should be disposed locally at the authorized collection point. If necessary, Baumer gives customers the opportunity to dispose of Baumer products professionally. For further information see www.baumer.com.

2. SAFETY AND ATTENTION INSTRUCTIONS

2.1 Safety instructions

Explosion risk
Spark formation can cause a fire or an explosion.

» Do not use the device in areas with explosive and/or highly inflammable materials. They may explode and/or catch fire by possible spark formation.

Risk of serious injuries due to rotating shafts
Hair and clothes may become tangled in rotating shafts. Touching the rotating parts can cause extremely serious injuries.

» Before all work switch off all voltage supplies and ensure machinery is stationary.

» Prevent reconnection voltage supply by third parties.

Risk of serious injuries due to consequential damages
Plants can be deregulated due to malfunction or faulty signals of the device.

» Damage caused by faulty operation or by a malfunction of the device must be eliminated by corresponding safety measures.

Risk of burns due to formation of heat
The device heats up at higher speed so there is a serious risk of burning shortly after the machine has been turned off.

» Examine carefully whether the device overheats. Wear suitable gloves if necessary.

2.2 Attention instructions for mounting and operation

☞ Risk of destruction due to electrostatic charge
Electronic parts contained in the device are sensitive to high voltages.

» Do not touch plug contacts or electronic components.

» Protect output terminals against external voltages.

» Do not exceed maximum voltage supply.

☞ Risk of destruction due to mechanical overload
Rigid mounting may give rise to constraining forces.

» Never restrict the freedom of movement of the device. The mounting instructions must be followed.

» It is essential that the specified clearances and/or angles are observed.

☞ Risk of destruction due to mechanical shock
Violent shocks, e. g. due to hammer impacts, can lead to the destruction of the sensing system.

» Never use force. Mounting is simple when correct procedure is followed.

» Use suitable puller for dismounting.

☞ Risk of destruction due to contamination
Dirt penetrating inside the device can cause short circuits and damage the sensing system.

» Absolute cleanliness must be maintained when carrying out any work on the device.

» Never allow lubricants to penetrate the device.

☞ Risk of destruction due to adhesive fluids
Adhesive fluids can damage the sensing system and the ball bearings. Dismounting a device, secured to a shaft by adhesive may lead to the destruction of the device.

» Do not use adhesive fluids for fixing.

3. PREPARATION

3.1 Scope of delivery

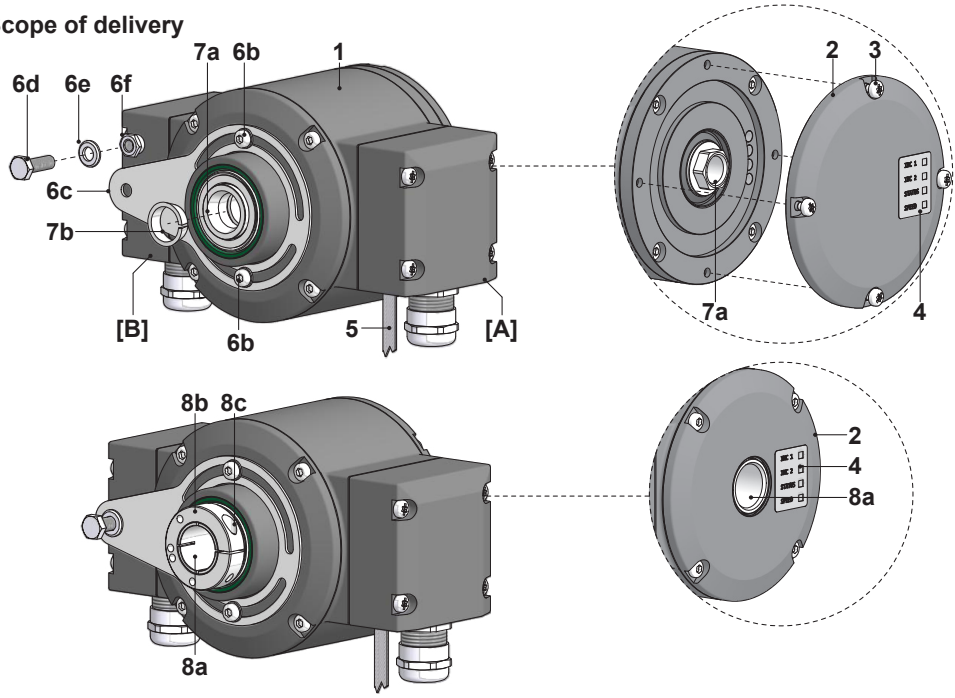

1 Housing

2 Cover

3 Torx/slotted screw M4x10 mm, DIN 7964

4 LED function indicators

5 Earthing strap, length ~230 mm

Equipment for mounting a torque arm:

6b Torx/slotted screw M4x20 mm, TX20, ISO 14583

6c Support plate for torque arm 360° freely positionable

6d Hexagon screw M6x18 mm, ISO 4017

6e Washer B6.4, ISO 7090

6f Self-locking nut M6, ISO 10511

Blind hollow shaft* or cone shaft*:

7a Blind hollow shaft or cone shaft with spanner flat 17 a/f

7b Clamping element, not for cone shaft

Through hollow shaft*:

8a Through hollow shaft

8b Clamping ring

8c Torx screw M3x12 mm, ISO 7045

Radial terminal boxes* (see *section 5*):

[A] Incremental output 1 (Option)

[B] Incremental output 2

* Depending on version

3.2 Required accessories for mounting/dismounting (not included in scope of delivery)

Connecting cables are required for the electrical connection. Details see *section 6.2, page 28*.

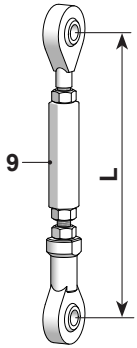

Torque arm, length L / order number

9 Standard:

67-70 mm / 11043628
125 (±5) mm, can be shortened to ≥71 mm / 11004078
440 (+20/-15) mm, can be shortened to ≥131 mm / 11002915

9 Insulated:

67-70 mm / 11054917
125 (±5) mm, can be shortened to ≥71 mm / 11072795
440 (+20/-15) mm, can be shortened to ≥131 mm / 11082677

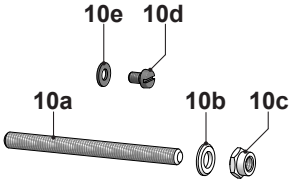

Mounting kit, order number 11077197:

10a Thread rod M6, length variable ≤210 mm

10b Washer B6.4, ISO 7090

10c Self-locking nut M6, ISO 10511

10d Cylinder screw M6x8 mm for earthing strap, ISO 1207

10e Washer B6.4 for earthing strap, ISO 7090

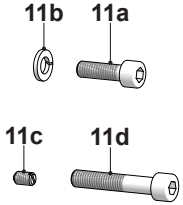

Mounting/dismounting kit, order number 11077087:
(Not required for through hollow shaft)

11a Cylinder screw M6x30 mm, ISO 4762

11b Spring washer 6, DIN 7980

11c Setscrew M6x10 mm, ISO 7436

11d Cylinder screw M8x45 mm, ISO 4762

3.3 Required tools (not included in scope of delivery)

- 3, 5 and 6 mm
- 1.6x8.0 mm and 0.8x4 mm
- 10 (2x), 17 and 22 mm
- TX 10, TX 20

4. MOUNTING

4.1 Positioning the support plate

Step 1 (delivery state)

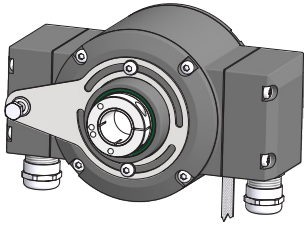

Step 2

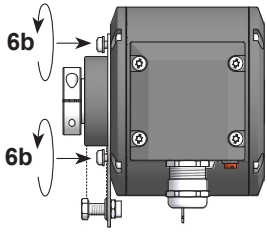

Screw (**6b**) loosen TX 20

Step 3

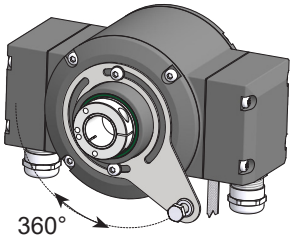

Turn support plate to desired position

Step 4

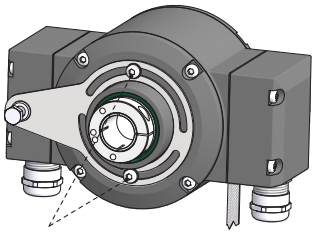

Screw tighten (**M_t = 2...3 Nm)**

Step 2.1 (Option)

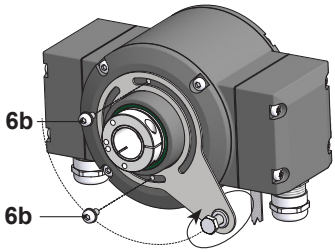

Remove screws (**6b**) completely
Turn over the support plate and back in slightly

4.2 Mounting the torque arm at the device

» Note the mounting instructions for the torque arm in *section 4.4, page 15*.

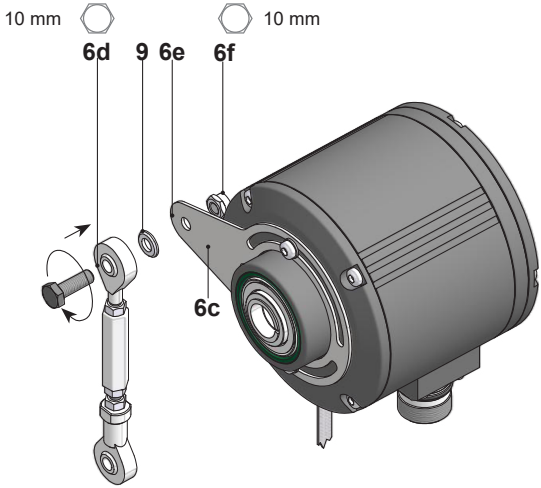

4.3 Mounting to the drive shaft

4.3.1 Blind hollow shaft

☞ Service life restrictions and angle error by runouts
High runout of the drive shaft can cause device angle error, see *section 4.5, page 18*.
High runout of the drive shaft can cause vibrations, which can shorten the service life of the device.

» Lubricate drive shaft!

» Minimize drive shaft runout (≤0.2 mm; ≤0.03 mm recommended).

ℹ The device must be mounted with cable connection facing downward and not exposed to water.

ød (mm)	L1 (mm)	L2 (mm)
16_{h6}	53	52 (40-52)
20_{h6}	35	34 (25-34)

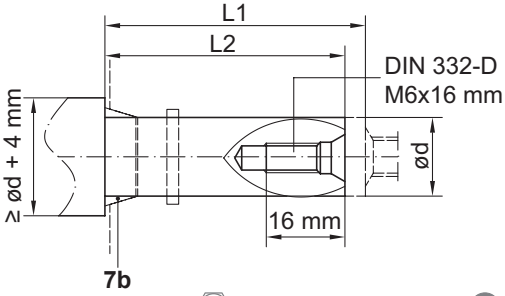

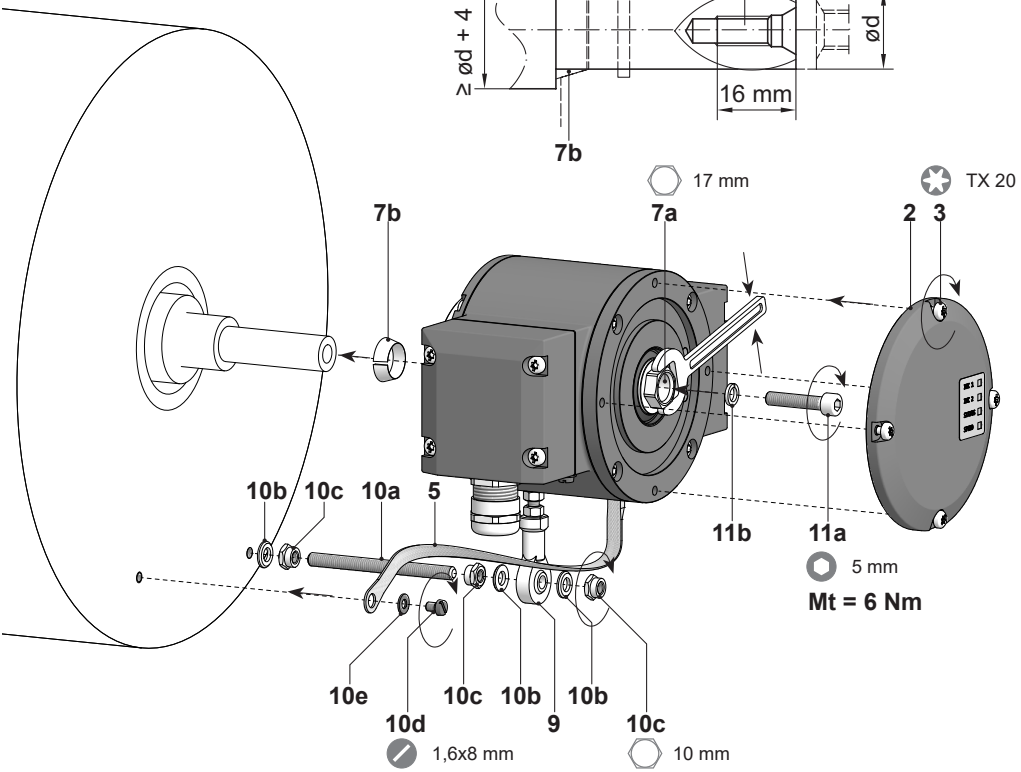

4.3.2 Cone shaft

☞ Service life restrictions and angle error by runouts
High runout of the drive shaft can cause device angle error, see *section 4.5, page 18*.
High runout of the drive shaft can cause vibrations, which can shorten the service life of the device.

» Lubricate drive shaft!

» Minimize drive shaft runout (≤0.2 mm; ≤0.03 mm recommended).

ℹ The device must be mounted with cable connection facing downward and not exposed to water.

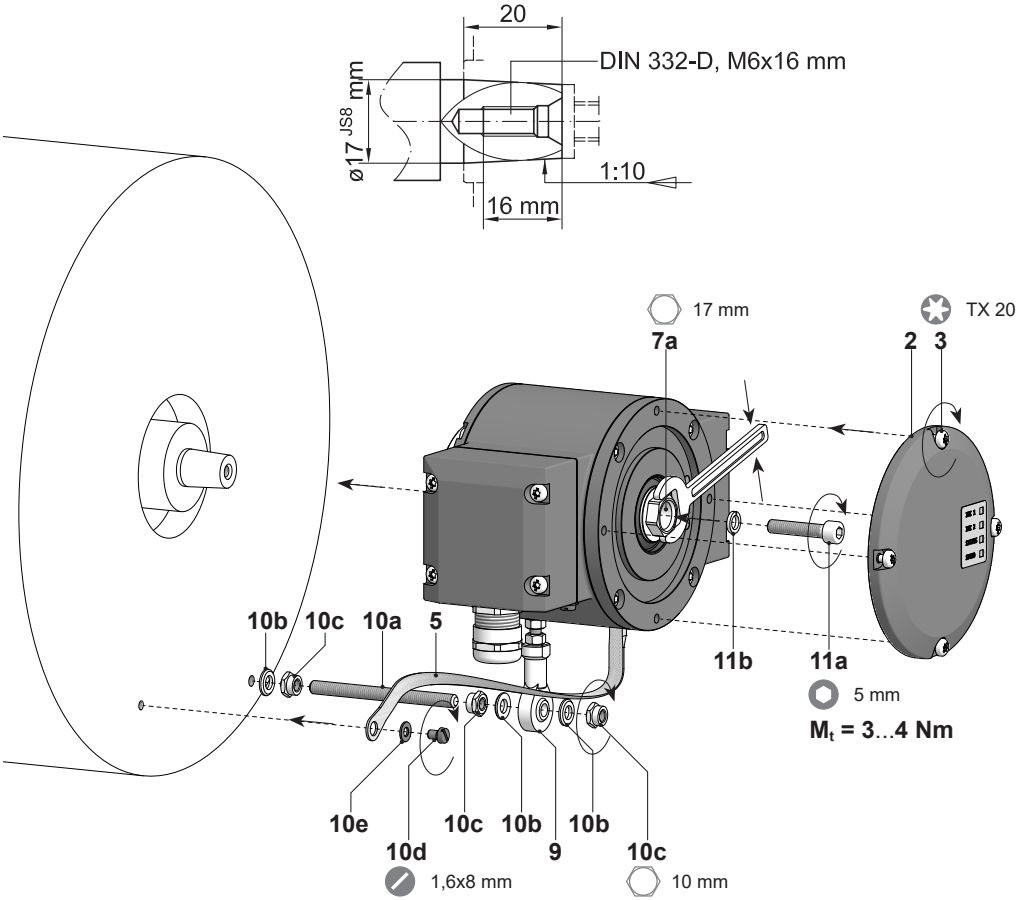

4.3.3 Through hollow shaft

☞ Service life restrictions and angle error by runouts
High runout of the drive shaft can cause device angle error, see *section 4.5, page 18*.
High runout of the drive shaft can cause vibrations, which can shorten the service life of the device.

» Lubricate drive shaft!

» Minimize drive shaft runout (≤0.2 mm; ≤0.03 mm recommended).

ℹ The device must be mounted with cable connection facing downward and not exposed to water.

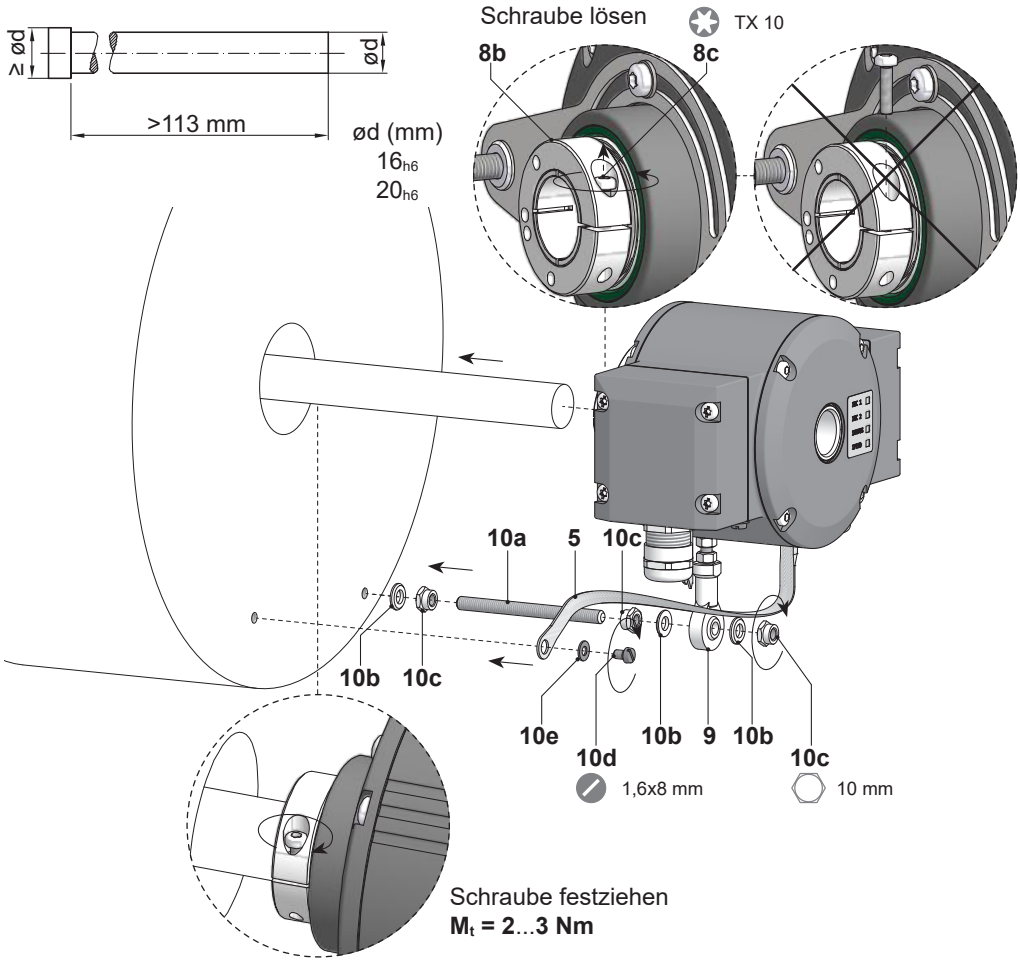

4.4 Drive side mounting of the torque arm

☞ Service life restrictions and angle error by runouts
A play of just ±0.03 mm, results in a runout of the device of 0.06 mm. That may lead to a large angle error, see *section 4.5, page 18*.

» Mount the torque arm without play.

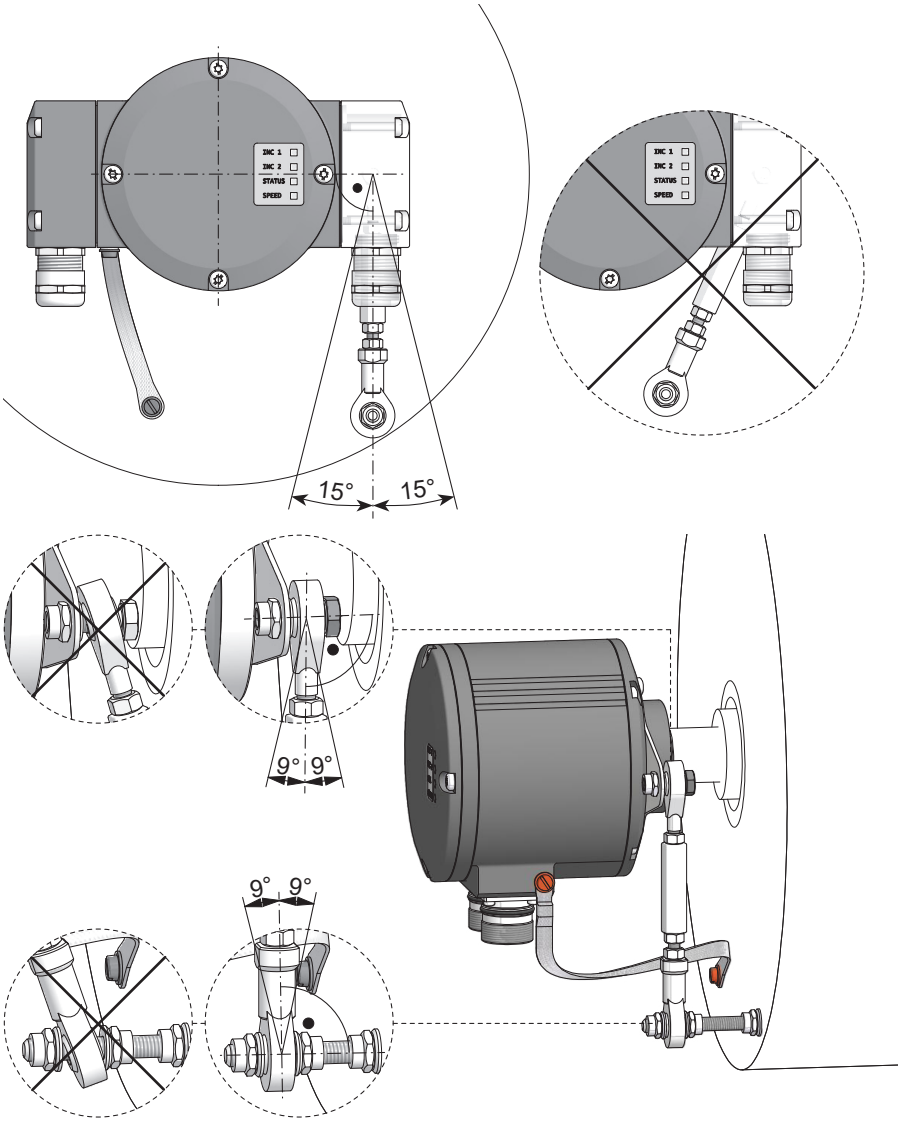

4.4.1 Extension comparison HMG10 and HOG10

The best compatibility with HOG10 mounting is achieved when the torque arm is mounted in this arrangement (facing away from the motor side).

However, this can only be achieved with 1x terminal box (connection reference -P) and 180° rotated mounting or with flange connector M23.

Comparison / Support plate

HMG10 with 1x terminal box

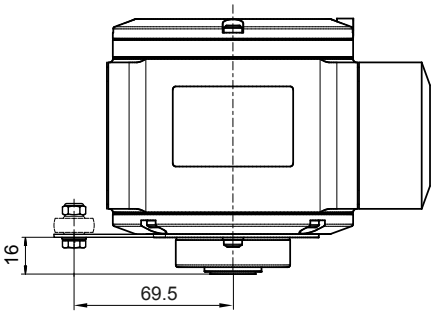

HOG 10

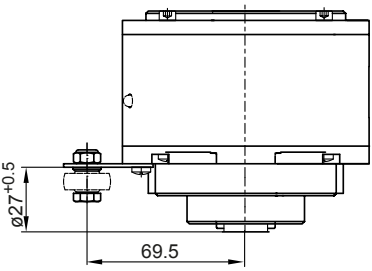

HMG10 with 2x terminal box

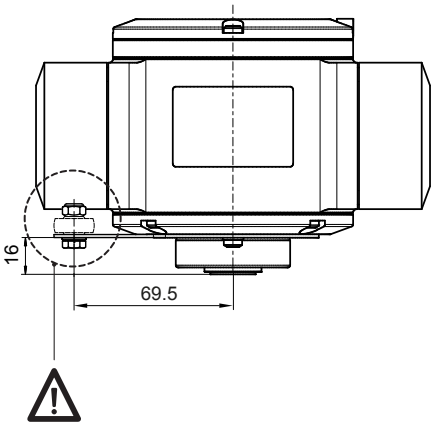

Or for the 1st generation HMG10 (2015-2020) with cranked support plate (11241731)

HMG10 with cranked support plate

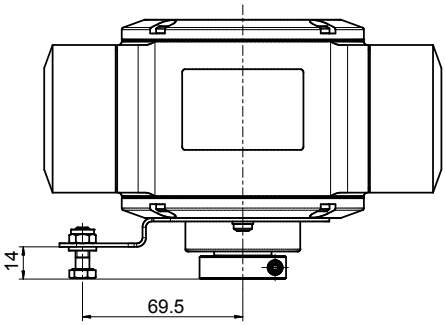

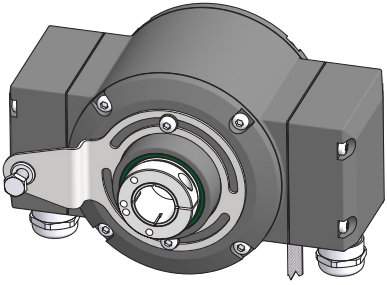

HMG10 (1st generation)

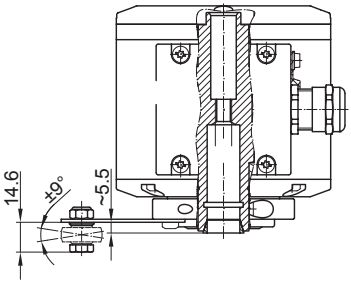

4.5 How to prevent measurement errors

To ensure that the device operates correctly, it is necessary to mount it accurately as described in section 4.1 to 4.4, which includes correct mounting of the torque arm.

The radial runout of the drive shaft should not exceed 0.2 mm (0.03 mm recommended), to prevent an angle error.

An angle error may be reduced by increasing the length of L1 [1]. Make sure that the length L2 of the torque arm, see below, is at least equal to L1 [2].

The angle error $\Delta\rho_{mech}$ can be calculated as follows:

$$\Delta\rho_{mech} = \pm 90°/\pi \cdot R/L1$$

with R: Radial runout in mm
L1: Distance of the torque arm to the center point of the device in mm

Example of calculation:

For R = 0.06 mm and L1 = 69.5 mm the resulting angle error $\Delta\rho_{mech}$ equals ±0.025°.

For more information, call the telephone hotline at +49 (0)30 69003-111

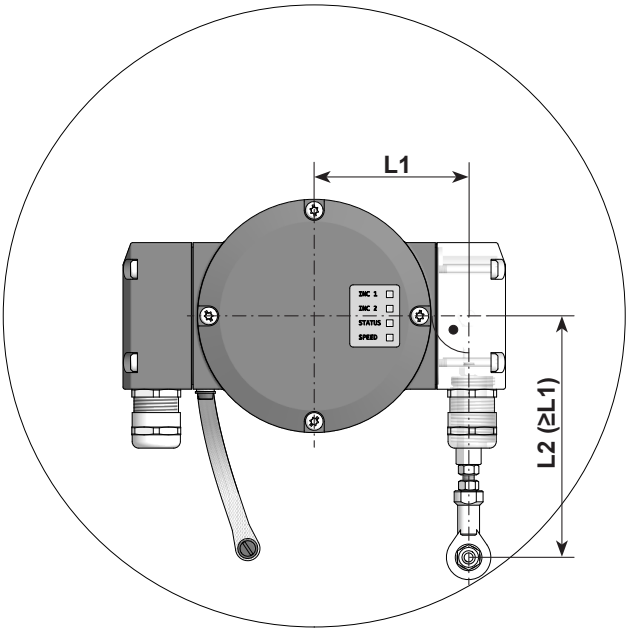

1) For this different support plates for the torque arm are available on request.
2) If L2 < L1, L2 must be used in the calculation formula.

5. ELECTRICAL CONNECTION

5.1 Terminal significance

Ub	Voltage supply
0V	Ground
A+	Output signal channel 1
A−	Output signal channel 1 inverted
B+	Output signal channel 2 (offset by 90° to channel 1)
B−	Output signal channel 2 inverted
R+	Zero pulse (reference signal)
R−	Zero pulse inverted
nE+	System OK+ / error output
nE−	System OK− / error output inverted
SP+ [3)]	DSL_OUT1 / speed switch (open collector)
SP− [3)]	DSL_OUT2 / speed switch (0V)
SA [4)]	RS485+ / programming interface
SB [4)]	RS485− / programming interface
dnu	Do not use

5.2 Output signals

Positive rotating direction when looking at the flange (see dimensions)

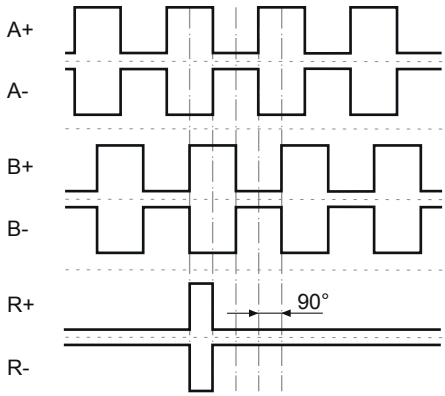

3) Speed switch (option)
4) Programming interface (only HMG10P)

5.3 Trigger level

Trigger level:	TTL/HTL (Vin = Vout)
High / Low:	≥2.5 V / ≤0.5 V (TTL)
	≥Ub -3 V / ≤1.5 V (HTL)
Transmission length:	≤550 m at 100 kHz (TTL)
	≤350 m at 100 kHz (HTL)
Output frequency	≤600 kHz (TTL)
	≤350 kHz (HTL)

5.4 Programming interface (only HMG10P)

Via connection SA and SB, encoder parameters such as the number of pulses for the incremental outputs 1 and 2 and/or the switch-off and switch-on speeds can be changed and read out. With the Z-PA.SDL.1 *WLAN adapter*, available as accessory, see *section 6.1*, the encoder can be accessed via a web browser.

5.5 LED function displays

LED	red	green
INC1 (incremental output 1)	Undervoltage, overload, over-temperature	OK
INC2 (incremental output 2)	Undervoltage, overload, over-temperature	OK
Status	Internal error	OK
Speed	Speed higher switching speed (overspeed)	Speed lower switching speed

5.6 Switching characteristics speed switch (option)

Event	State of the speed switch output
During initialisation	High resistance (overspeed)
After initialisation and speed ≤ -ns (off)	High resistance (overspeed)
-ns (off) < speed ≤ -ns (on)	State unchanged Low resistance (no overspeed) after initialisation if the device is rotating between the switching range during initialisation.
-ns (on) < speed < +ns (on)	Low resistance (no overspeed)
+ns (on) ≤ speed < +ns (off)	State unchanged Low resistance (no overspeed) after initialisation if the device is rotating between the switching range during initialisation.
+ns (off) ≤ speed	High resistance (overspeed)

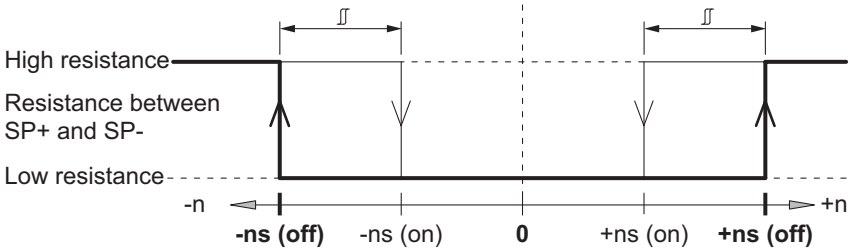

n = Speed

+ns (off) = Switch-off speed at shaft rotation in positive rotating direction*
-ns (off) = Switch-off speed at shaft rotation in negative rotating direction*

Switching hysteresis ∫∫: 10...100 % (factory setting = 10 % min. 1 Digit)

+ns (on) = Switch-on speed at shaft rotation in positive rotating direction*
-ns (on) = Switch-on speed at shaft rotation in negative rotating direction*

* See *section 7, page 29*.

5.7 Cable connection

☞ To ensure the specified protection of the device the correct cable diameter must be used.

Connecting cables are not in scope of delivery and can be ordered separately as accessory, see *section 6.2, page 28*.

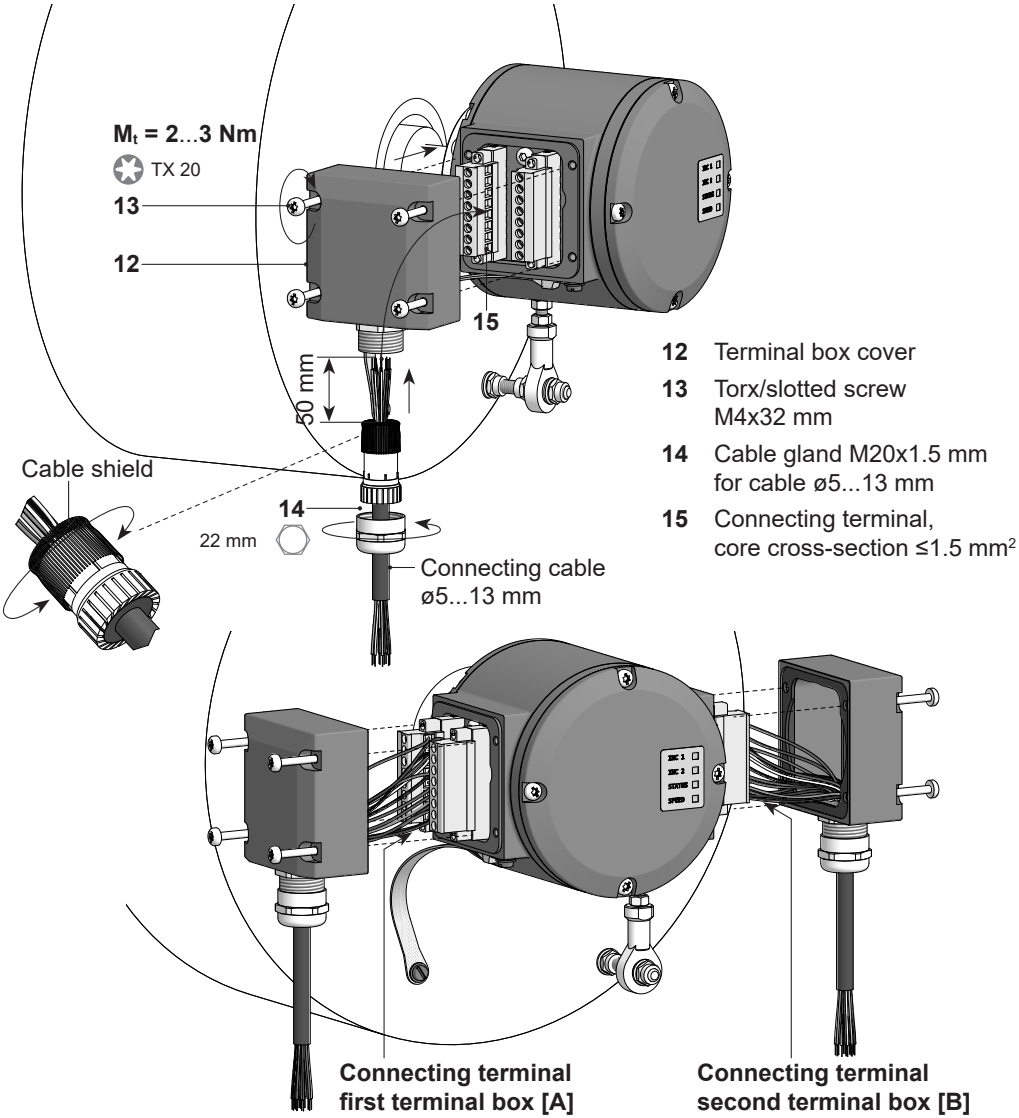

5.8 Assignment connecting terminal

☞ Do not connect voltage supply to outputs! Danger of damage!
Please, beware of possible voltage drop in long cable leads (inputs and outputs)!

1x terminal box - View B (see dimensions)
Incremental output II (connection reference -P)

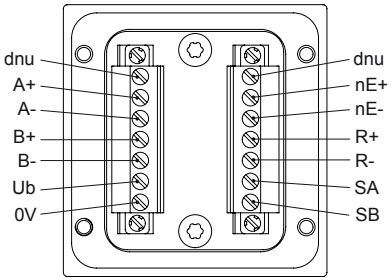

1x terminal box - View B (see dimensions)
Incremental output II + speed switch (connection reference -P)

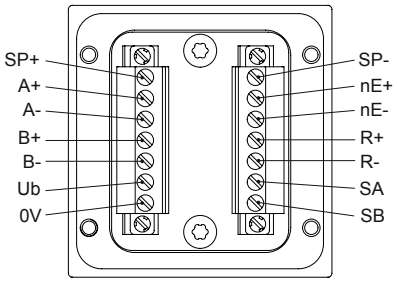

1x terminal box - View B (see dimensions)
Speed switch (connection reference -P)

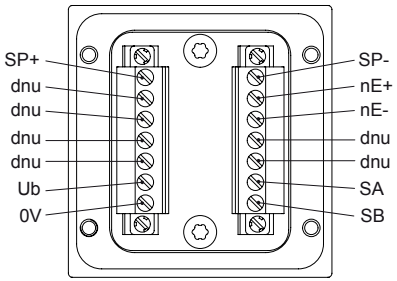

2x terminal box - View B (see dimensions)
Incremental output II (connection reference -M)

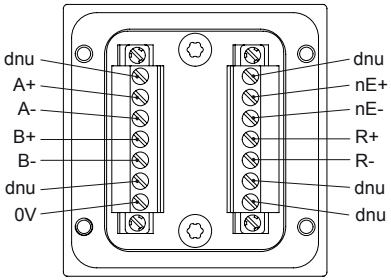

2x terminal box - View B (see dimensions)
Incremental output II + speed switch (connection reference -M)

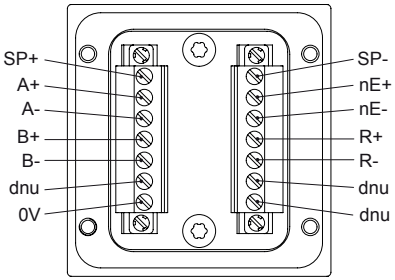

2x terminal box - View A (see dimensions)
Incremental output I (connection reference -M)

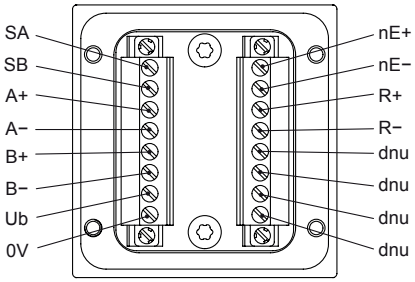

5.9 Assignment flange connector M23

☞ Do not connect voltage supply to outputs! Danger of damage!
Please, beware of possible voltage drop in long cable leads (inputs and outputs)!

1x flange connector M23 - View B (see dimensions)
Incremental output II (connection reference -H)

Pin	Assignment
1	B-
2	SB
3	R+
4	R-
5	A+
6	A-
7	dnu
8	B+
9	dnu
10	0 V
11	SA
12	Ub

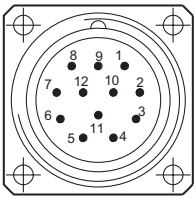

1x flange connector M23 - View B (see dimensions)
Incremental output II + speed switch (connection reference -H)

Pin	Assignment
1	B-
2	SB
3	R+
4	R-
5	A+
6	A-
7	SP+
8	B+
9	SP-
10	0 V
11	SA
12	Ub

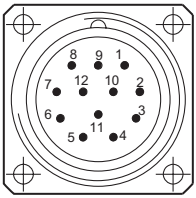

1x flange connector M23 - View B (see dimensions)
Speed switch (connection reference -H)

Pin	Assignment
1	dnu
2	SB
3	dnu
4	dnu
5	dnu
6	dnu
7	SP+
8	dnu
9	SP-
10	0 V
11	SA
12	Ub

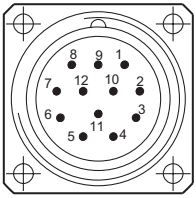

2x flange connector M23 - View B / A (see dimensions)
Incremental output II / Incremental output I (connection reference -L)

Pin	View B/Inc.-outp. II
1	B-
2	dnu
3	R+
4	R-
5	A+
6	A-
7	dnu
8	B+
9	dnu
10	0 V
11	dnu
12	dnu

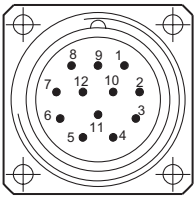

Pin	View A/Inc.-outp. I
1	B-
2	dnu
3	R+
4	R-
5	A+
6	A-
7	SA
8	B+
9	SB
10	0 V
11	dnu
12	Ub

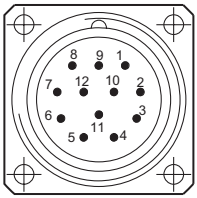

2x flange connector M23 - View B / A (see dimensions)
Incremental output II + speed switch / Incremental output I
(connection reference -L)

Pin	View B/Inc.-outp. II + DSL
1	B-
2	dnu
3	R+
4	R-
5	A+
6	A-
7	SP+
8	B+
9	SP-
10	0 V
11	dnu
12	dnu

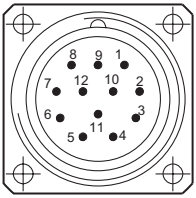

Pin	View A/Inc.-outp. I
1	B-
2	dnu
3	R+
4	R-
5	A+
6	A-
7	SA
8	B+
9	SB
10	0 V
11	dnu
12	Ub

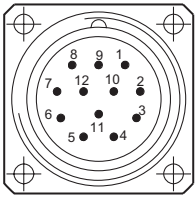

6. ACCESSORIES

6.1 Z-PA.SDL.1 *WLAN adapter*: Programming device for HMG10P

The Z-PA.SDL.1 *WLAN adapter* is a programming device for programming and monitoring HMG10P/PMG10P series encoders.

The following encoder parameters can be parameterized (depending on the version of the encoder):

- Incremental output 1 and 2 (number of pulses per revolution)
- Switch-off and switch-on speeds

The programming device can be configured and operated via a web browser.

i A detailed description of all available functions can be find in the mounting and operating instructions of the *WLAN adapter*.

	Part number
Z-PA.SDL.1 WLAN adapter	11190106

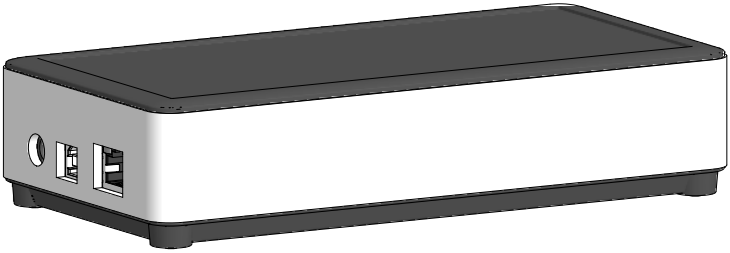

6.2 Sensor cable

HEK 8 - Sensor cable with 10 wires for encoder
2 wires 0,5 mm^2 (power supply), 4 twisted pair signal wires 0,25 mm^2 (signal), cable length on request.

HEK 17 - Sensor cable with 16 wires for encoder
2 wires 0,5 mm^2 (power supply), 3 twisted pair signal wires 0,14 mm^2 (signal), 4 wires 0,14 mm^2 (signal), 4 wires 0,22 mm^2 (data), cable length on request.

7. DIMENSIONS

Blind hollow shaft with 1x terminal box (connection reference -P)

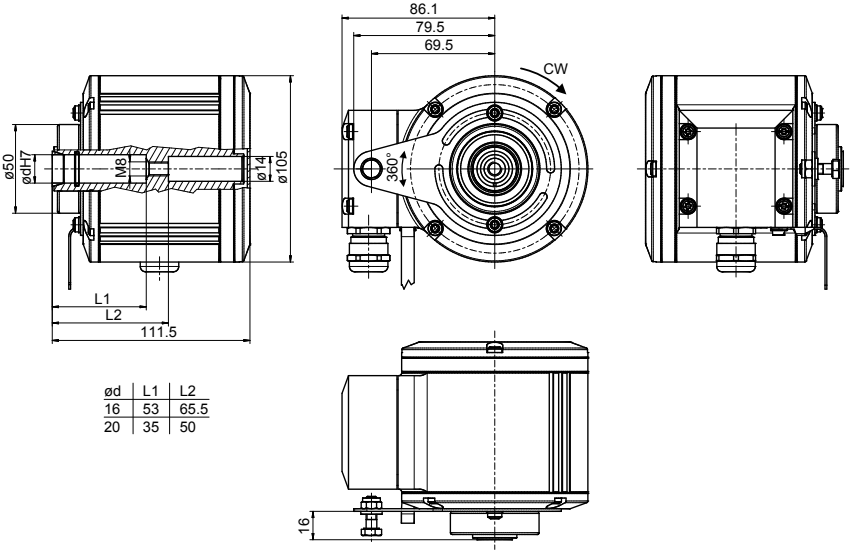

ød	L1	L2
16	53	65.5
20	35	50

Blind hollow shaft with 2x terminal box (connection reference -M)

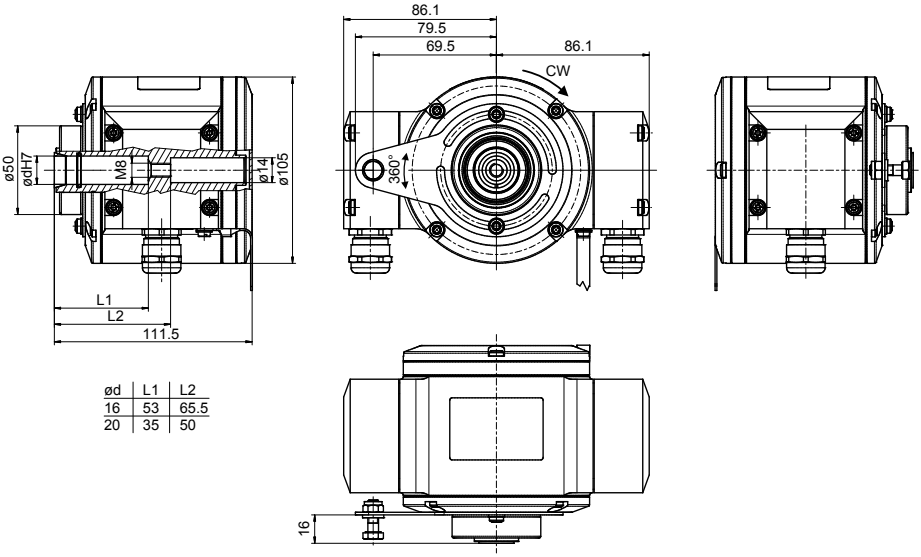

ød	L1	L2
16	53	65.5
20	35	50

Blind hollow shaft with 1x flange connector (connection reference -H)

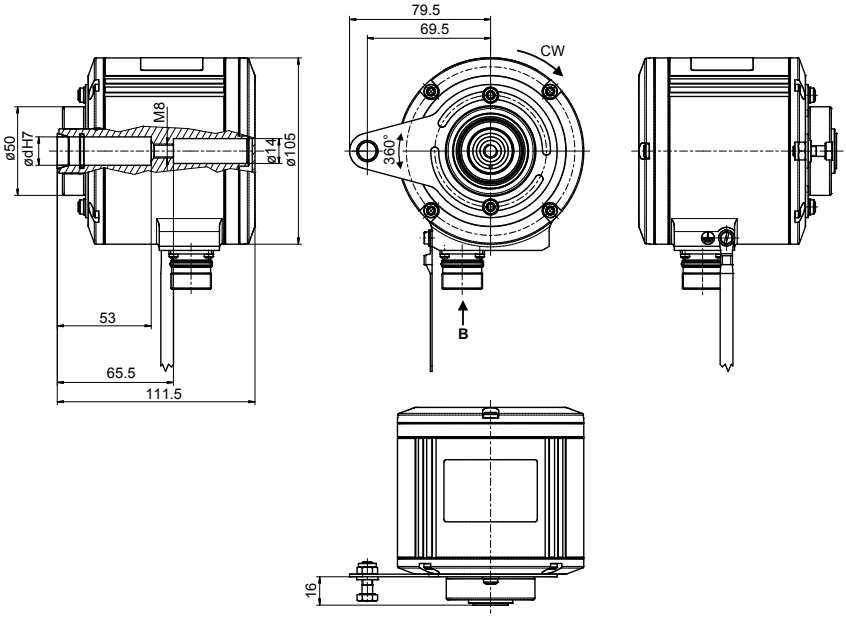

Blind hollow shaft with 2x flange connector (connection reference -L)

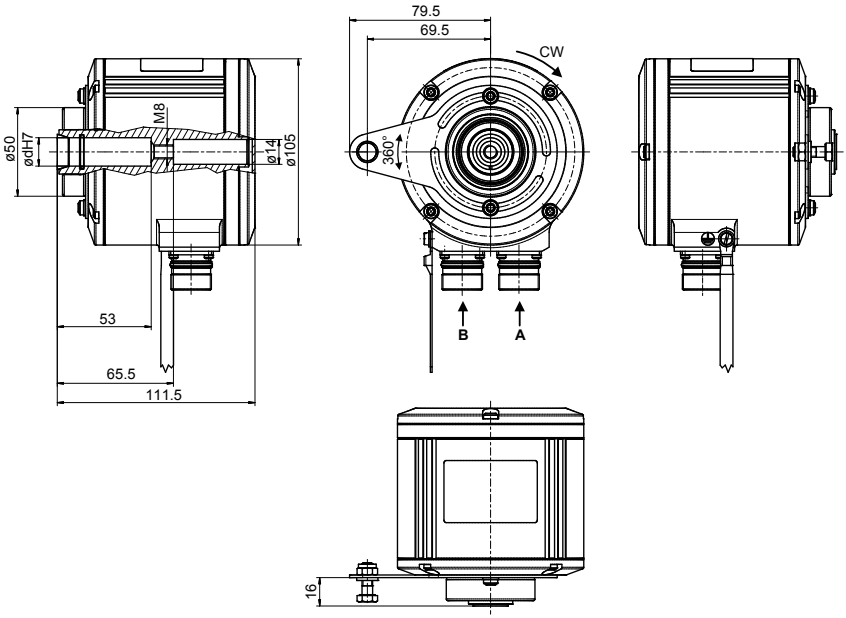

Through hollow shaft with 1x terminal box (connection reference -P)

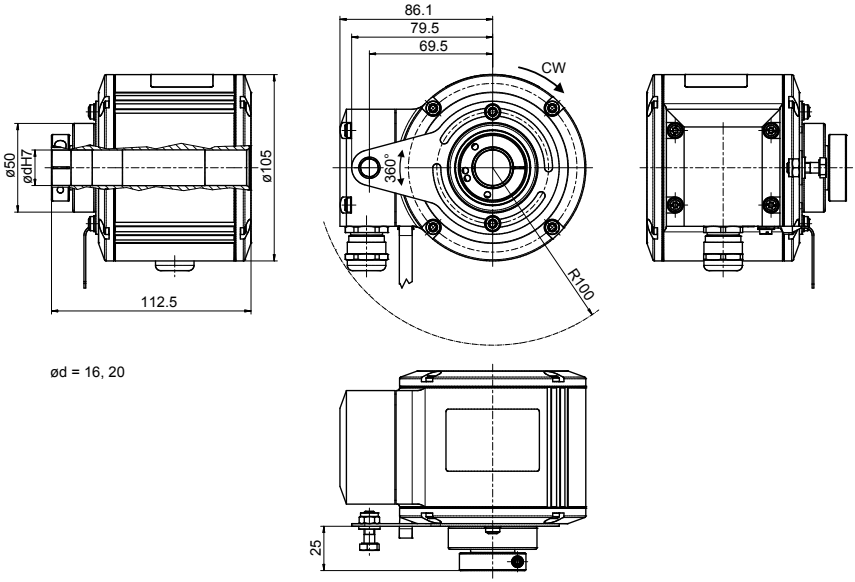

ød = 16, 20

Through hollow shaft with 2x terminal box (connection reference -M)

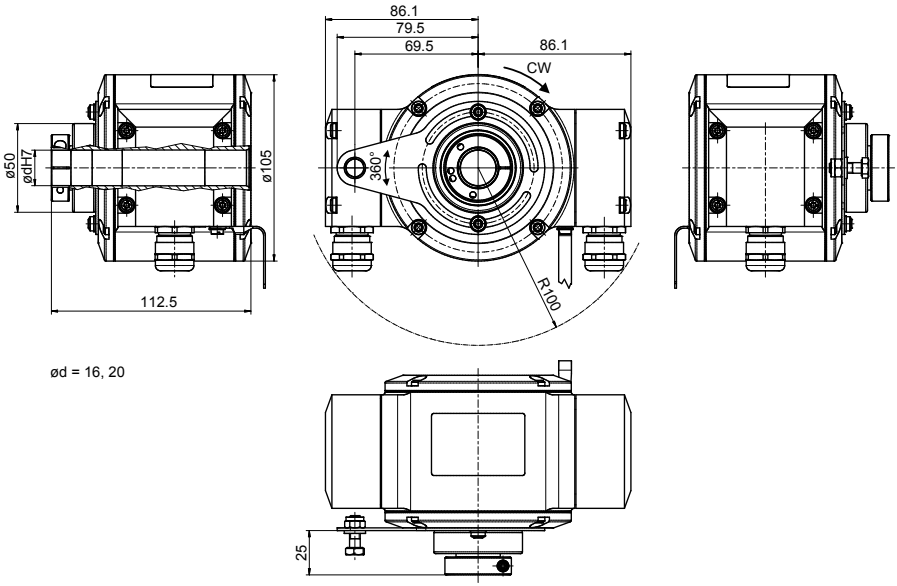

ød = 16, 20

Through hollow shaft with 1x flange connector M23 (connection reference -H)

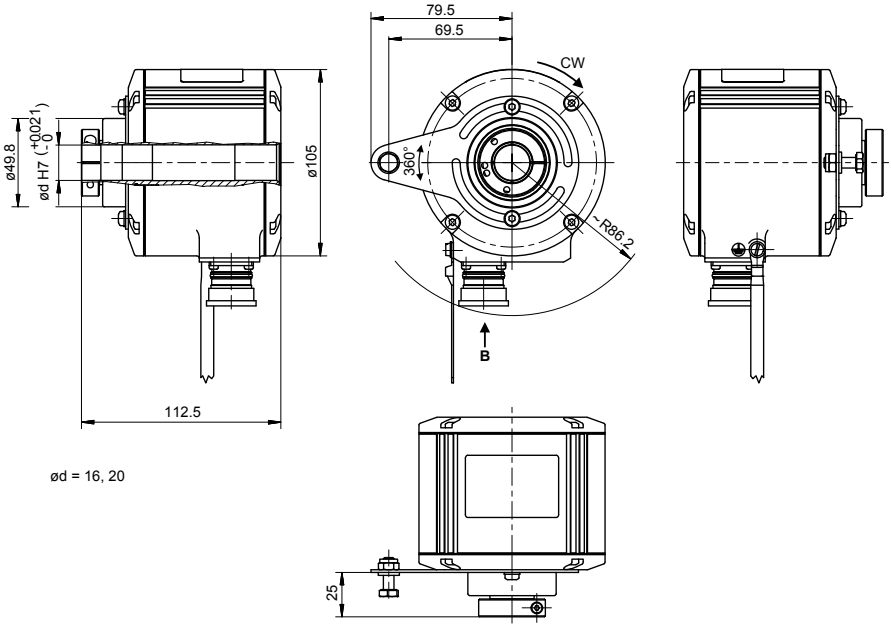

Through hollow shaft with 2x flange connector M23 (connection reference -L)

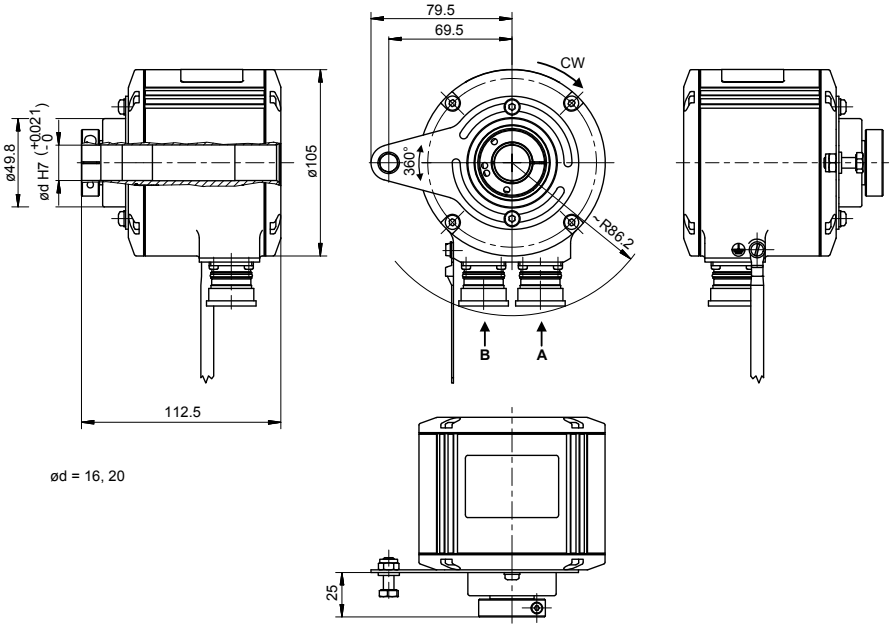

Cone shaft for respective connection (connection reference -P, -M, -H, -L)

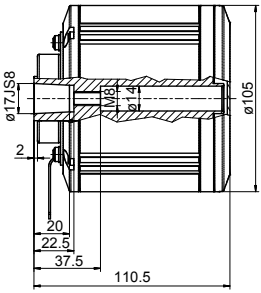

8. DISMOUNTING

Risk of serious injuries
Disconnect all electrical connections before dismounting.

8.1 Blind hollow shaft or cone shaft

Pictures showing the device with blind hollow shaft. The dismounting steps be identical with cone shaft.

Step 1

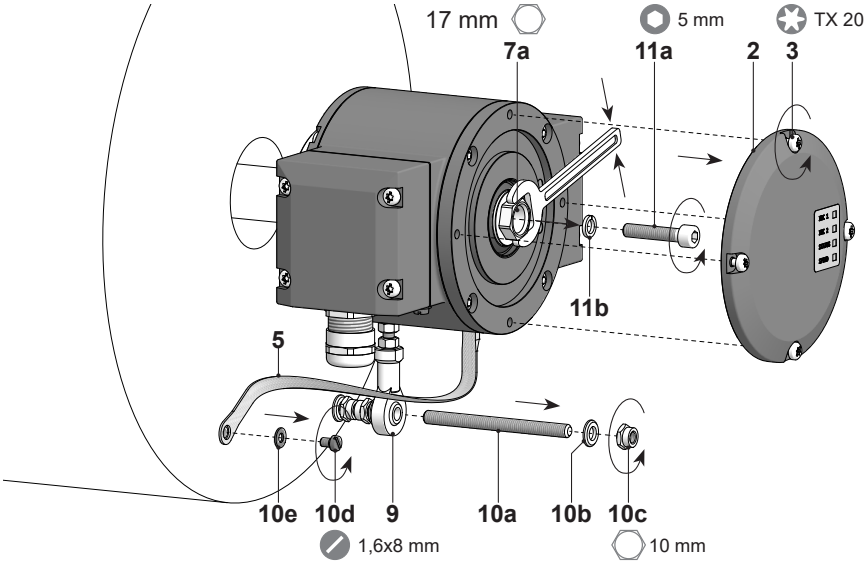

Step 2

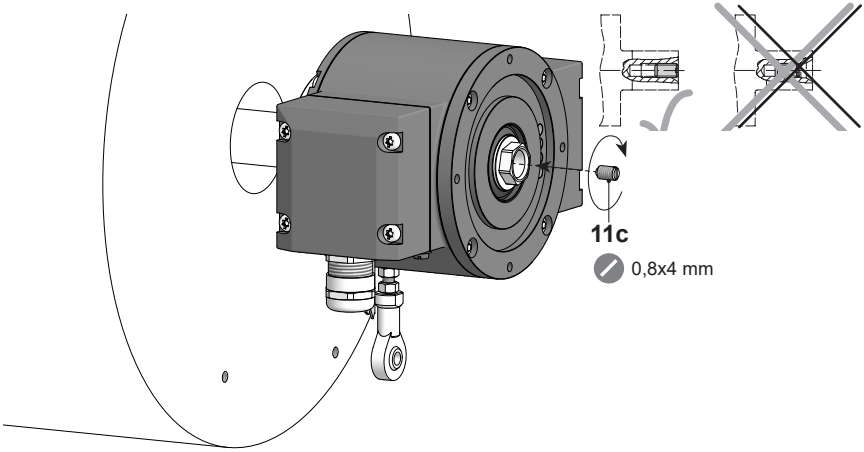

Step 3

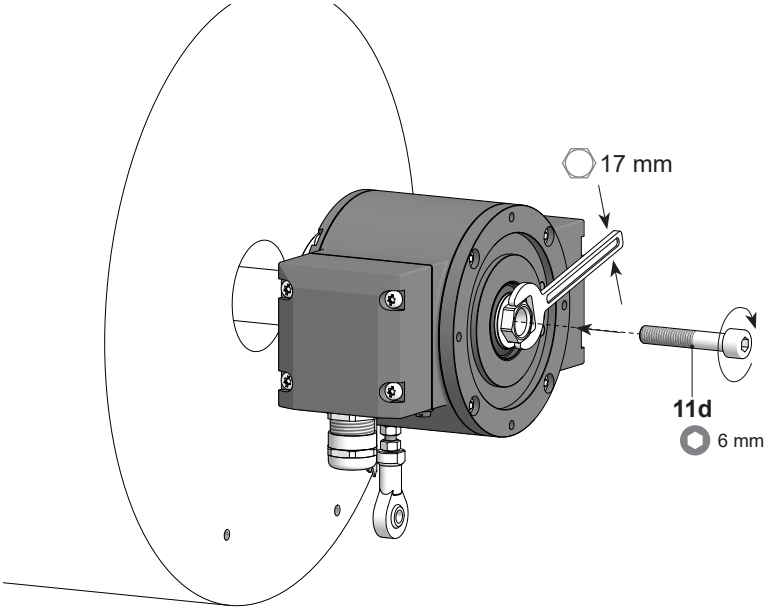

Step 4

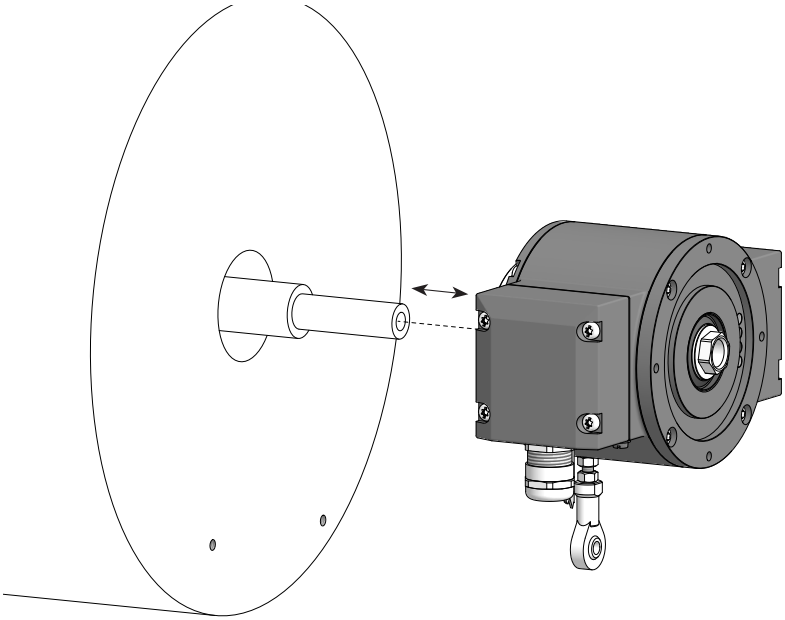

8.2 Through hollow shaft

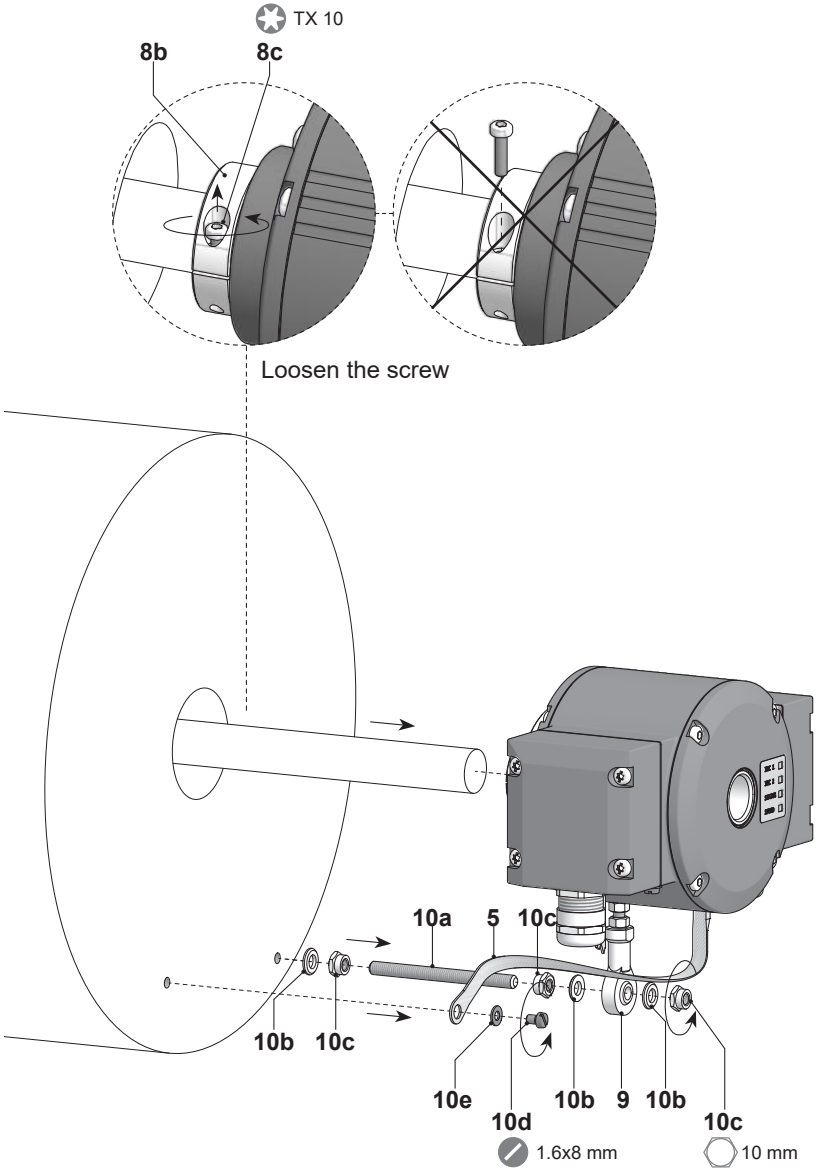

9. TECHNICAL DATA

9.1 Technical data - electrical ratings

Voltage supply:	4.75...30 VDC
Short-circuit proof:	Yes
Consumption w/o load:	≤100 mA
Initializing time:	≤500 ms after power on
Pulses per revolution:	1...131072
Phase shift:	90° ±20°
Duty cycle:	40...60 %
Reference signal:	Zero pulse, width 90°
Sensing method:	Magnetic
Output signals:	A+, B+, R+, A−, B−, R− Error output nE+, nE−
Output stages:	TTL/HTL (Vin = Vout)
Programming interface:	RS485 (≤600 m)
Programmable parameters:	Pulse number Switch-off and switch-on speeds Switching delay time
Diagnostic function:	Function control
Status indicator:	4 LEDs in device back side
Interference immunity:	EN 61000-6-2
Emitted interference:	EN 61000-6-3
Approvals:	UL, CE, EAC

9.2 Technical data - electrical ratings (speed switches)

Switching accuracy:	±2 % (or 1 Digit)
Switching outputs:	1 output (Open collector)
Output switching capacity:	30 VDC; ≤100 mA
Switching hysteresis:	>10...100 % adjustable
Switching delay time:	≤20 ms

9.3 Technical data - mechanical design

Size (flange):	ø105 mm
Admitted shaft load:	≤450 N axial ≤650 N radial
Flange:	Support plate for torque arm, 360° freely positionable
Protection EN 60529:	IP 66/IP 67
Operating speed:	≤12000 rpm
Range of switching speed:	ns (off) = ±2...12000 rpm, factory setting 6000 rpm
Operating torque typ.:	10 Ncm
Rotor moment of inertia:	950 gcm^2
Materials:	Housing: aluminium alloy Shaft: stainless steel
Operating temperature:	-40...+95 °C
Relative humidity:	95 % non-condensing
Resistance:	IEC 60068-2-6 Vibration 30 g, 10-2000 Hz IEC 60068-2-27 Shock 400 g, 1 ms
Corrosion protection:	IEC 60068-2-52 Salt mist complies to ambient conditions CX (C5-M) according to ISO 12944-2
Weight approx.:	1.6 kg
Connection:	Terminal box Flange connector M23

HMG10-B

Shaft type:	ø16...20 mm (blind hollow shaft) ø17 mm (cone shaft 1:10)

HMG10-T

Shaft type:	ø16...20 mm (through hollow shaft)

Baumer

Baumer Germany GmbH & Co. KG
Bodenseeallee 7
DE-78333 Stockach
www.baumer.com

MB258EN - 11196411, 22A1 (24.10.2022), Baumer_HMG10-INC_EN_202210_MI_11196411